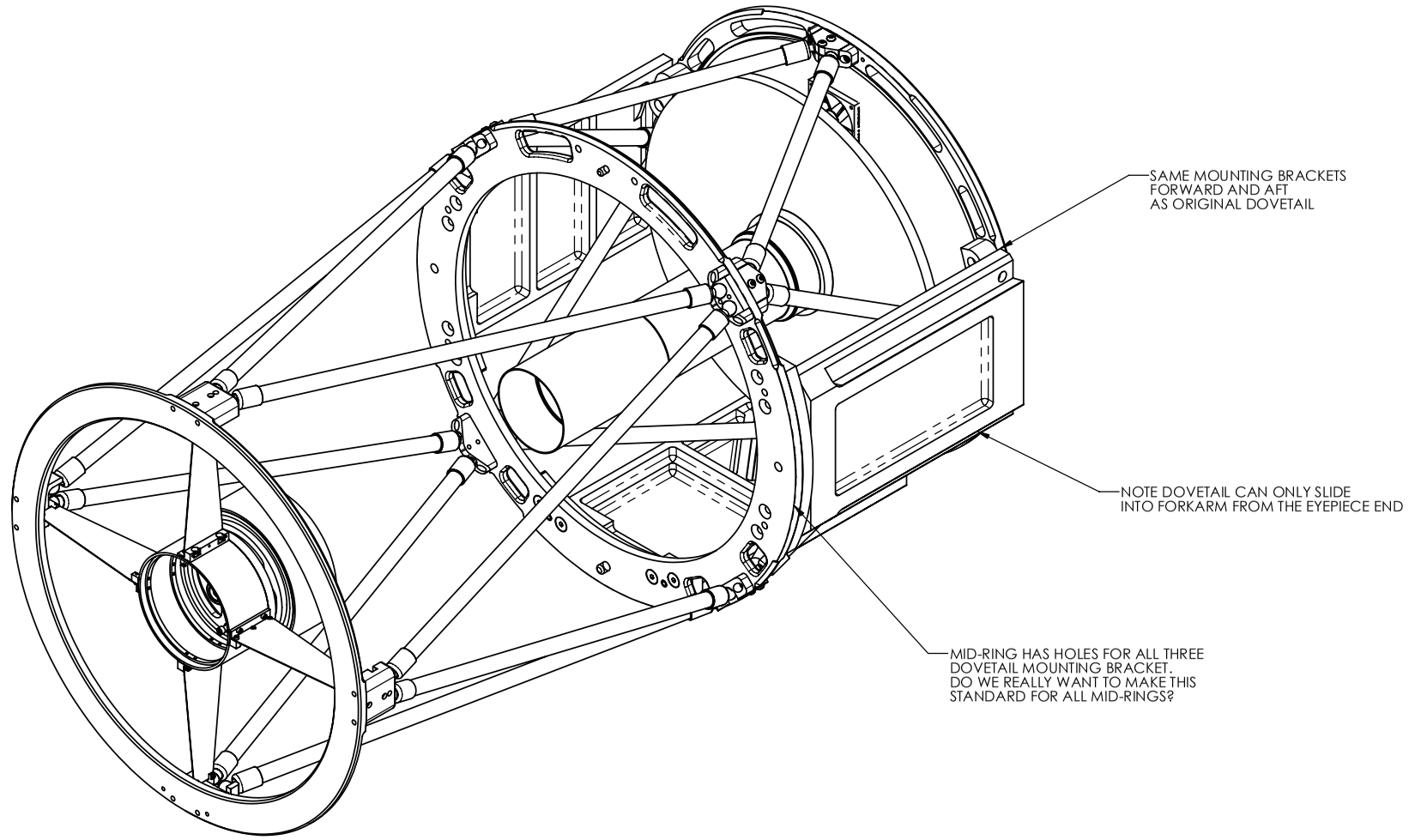
SAME MOUNTING BRACKETS
FORWARD AND AFT
AS ORIGINAL DOVETAIL
NOTE DOVETAIL CAN ONLY SLIDE
INTO FORKARM FROM THE EYEPIECE END
MID-RING HAS HOLES FOR ALL THREE
DOVETAIL MOUNTING BRACKET.
DO WE REALLY WANT TO MAKE THIS
STANDARD FOR ALL MID-RINGS?

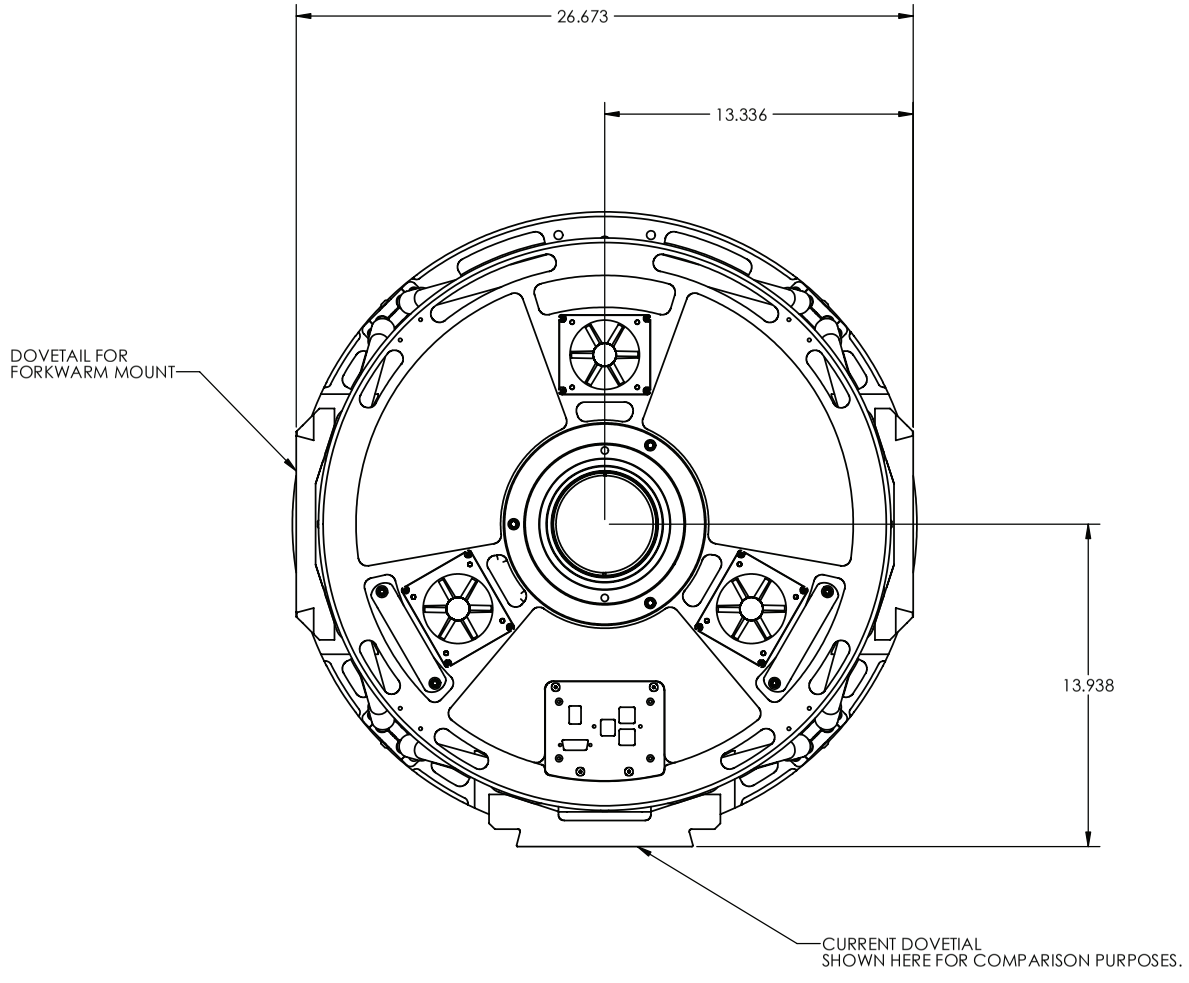
26.673
13.336
13.938
DOVETAIL FOR
FORKWARM MOUNT
CURRENT DOVETIAL
SHOWN HERE FOR COMPARISON PURPOSES.

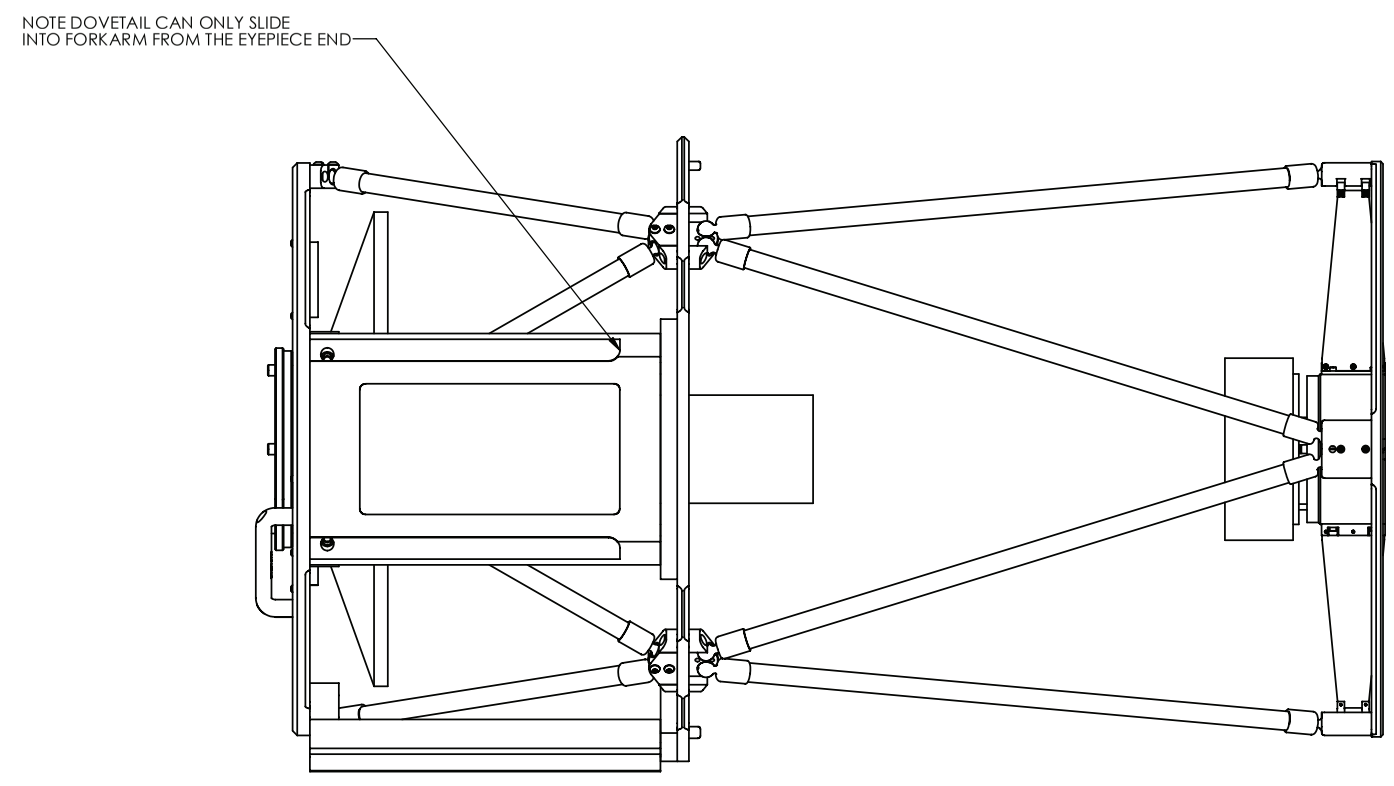
NOTE DOVETAIL CAN ONLY SLIDE
INTO FORKARM FROM THE EYEPIECE END