REVISIONS				
ZONE	REV.	DESCRIPTION	DATE	APPROVED
	A	INITIAL RELEASE	12/7/2011	KAI

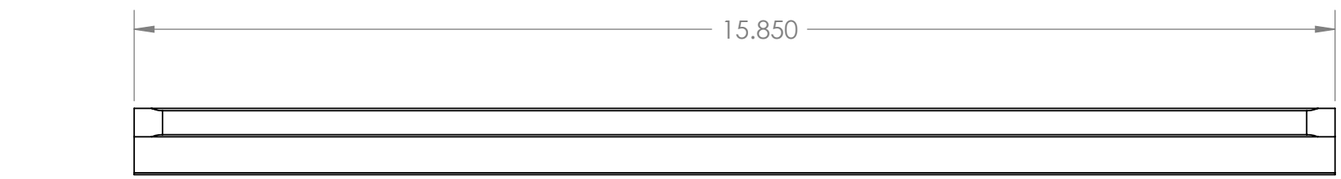

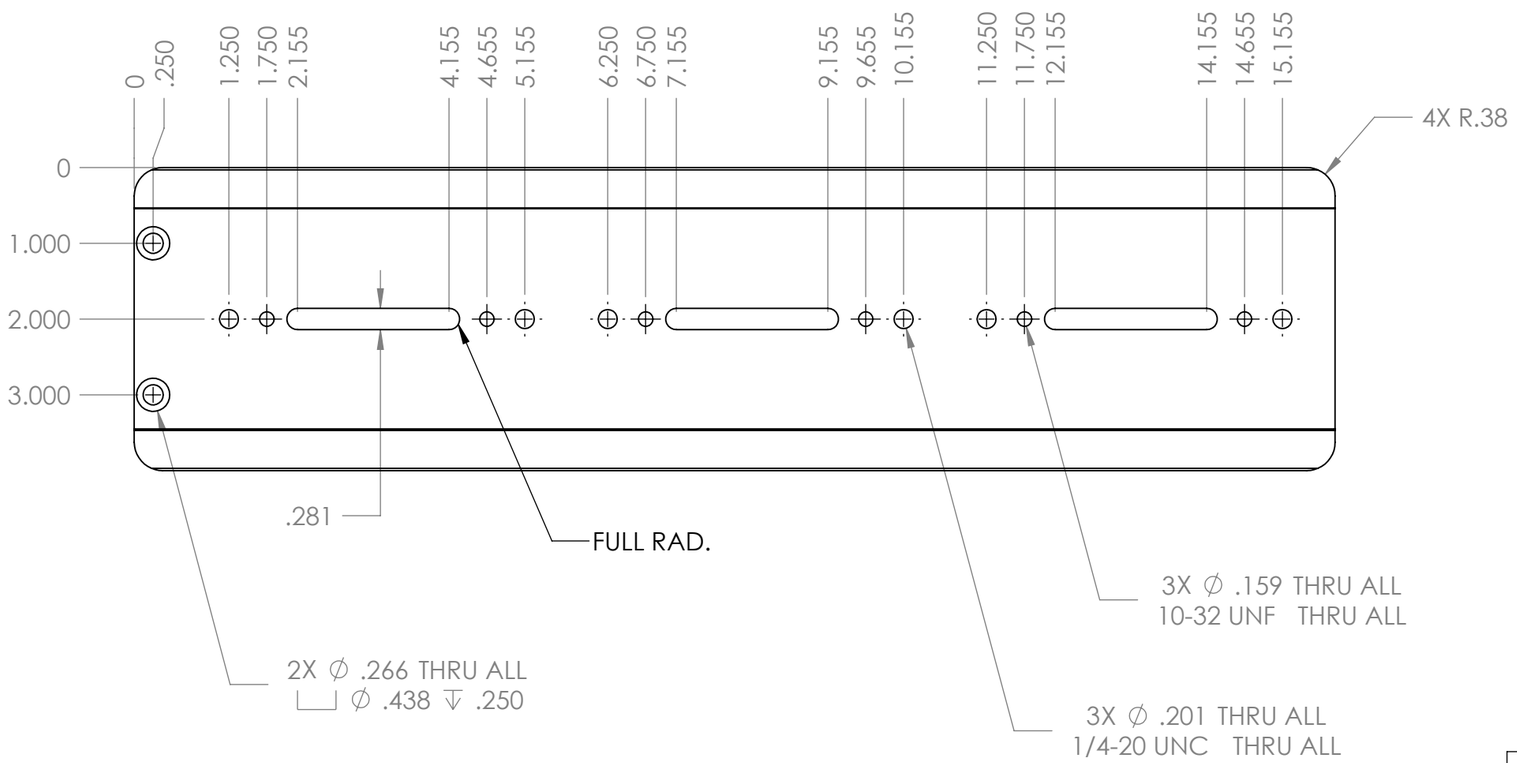

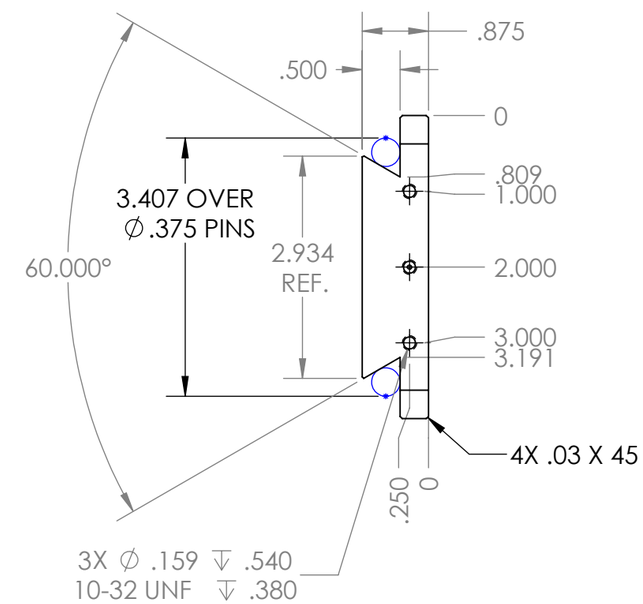

PROPRIETARY AND CONFIDENTIAL
THE INFORMATION CONTAINED IN THIS DRAWING IS THE SOLE PROPERTY OF PLANEWAVE INSTRUMENTS. ANY REPRODUCTION IN PART OR AS A WHOLE WITHOUT THE WRITTEN PERMISSION OF PLANEWAVE INSTRUMENTS IS PROHIBITED.

UNLESS OTHERWISE SPECIFIED
TOLERANCES

DECIMAL DIM
.XXXX ±.0005
.XXX ±.005
.XX ±.02

ANGULAR DIM
MACHINED ±0° 30'
LOCATING ±0° 30'
FORMED ±1°
CHAMFERS ±5°

SURFACE FINISH 63
MAX R 0.015

BREAK ALL SHARP EDGES & REMOVE BURRS.

	NAME	DATE
DRAWN	KAI	12/7/2011
CHECKED		
ENG APPR.		

MATERIAL
6061-T6 AL ALLOY

FINISH
BLACK ANODIZE TYPE II

PlaneWave Instruments

TITLE
CDK20 ACC DOVETAIL

SIZE B | DWG. NO. 2003128 | REV. A

SCALE:1:2 | CAD FILE: 2003128A | SHEET 1 OF 1